27777
28900

Fisher Engineering
50 Gordon Drive, Rockland, Maine 04841-2139 • www.fisherplows.com

February 1, 2008
Lit. No. 27476, Rev. 09

COMMON ATTACHMENT KIT

RD, HD and X Series
Installation Instructions

⚠ CAUTION
Read this document before installing the snowplow.

⚠ CAUTION
See your FISHER® outlet/Web site for specific vehicle application recommendations before installation. The Kit Selection Guide has specific vehicle and snowplow requirements.

SAFETY DEFINITIONS

⚠ WARNING

Indicates a potentially hazardous situation that, if not avoided, could result in death or serious personal injury.

⚠ CAUTION

Indicates a potentially hazardous situation that, if not avoided, may result in minor or moderate injury. It may also be used to alert against unsafe practices.

NOTE: Indicates a situation or action that can lead to damage to your snowplow and vehicle or other property. Other useful information can also be described.

WARNING/CAUTION AND INSTRUCTION LABELS

Become familiar with and inform users about the warning labels on the back of the blade, and the instruction label on the headgear.

NOTE: If labels are missing or cannot be read, see your sales outlet.

Warning/Caution Label

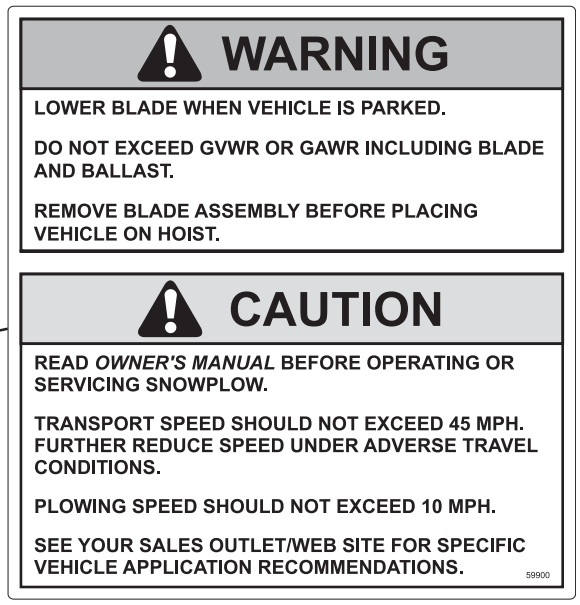

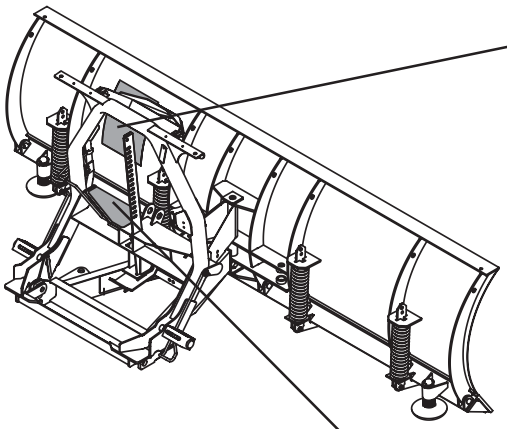

Instruction Label

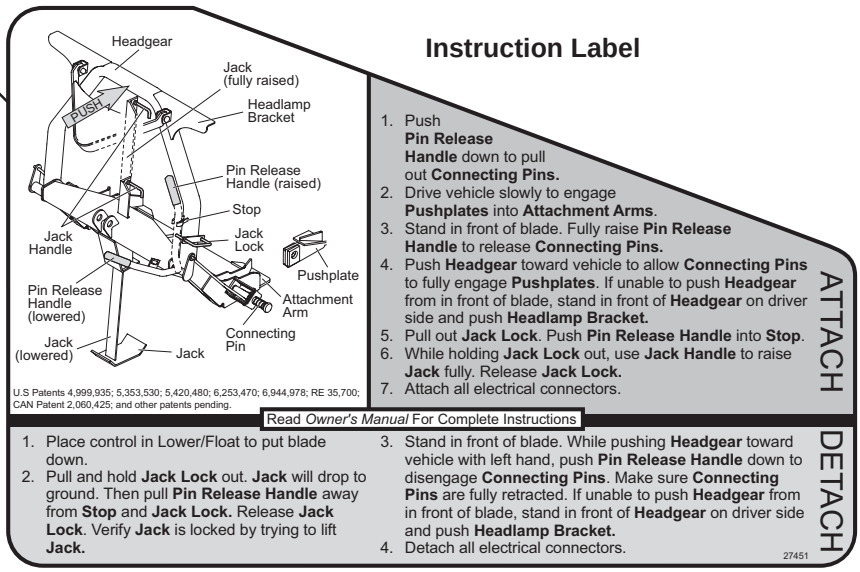

SAFETY PRECAUTIONS

Improper installation and operation could cause personal injury, and/or equipment and property damage. Read and understand labels and the Owner's Manual before installing, operating or making adjustments.

⚠ WARNING

Lower blade when vehicle is parked. Temperature changes could change hydraulic pressure, causing the blade to drop unexpectedly or damaging hydraulic components. Failure to do this can result in serious personal injury.

⚠ WARNING

The driver shall keep bystanders clear of the blade when it is being raised, lowered or angled. Do not stand between the vehicle and the blade or within 8 feet of a moving blade. A moving or falling blade could cause personal injury.

⚠ WARNING

Keep hands and feet clear of the blade and A-frame when mounting or removing the snowplow. Moving or falling assemblies could cause personal injury.

⚠ WARNING

Do not exceed GVWR or GAWR including blade and ballast. The rating label is found on driver-side vehicle door cornerpost.

⚠ WARNING

To prevent accidental movement of the blade, always turn the ON/OFF switch to OFF whenever the snowplow is not in use. The control indicator light will turn off.

⚠ WARNING

Remove blade assembly before placing vehicle on hoist.

⚠ CAUTION

Refer to the Kit Selection Guide for minimum vehicle recommendations and ballast requirements.

PERSONAL SAFETY

- Remove ignition key and put the vehicle in park or in gear to prevent others from starting the vehicle during installation or service.
- Wear only snug-fitting clothing while working on your vehicle or snowplow.
- Do not wear jewelry or a necktie, and secure long hair.
- Wear safety goggles to protect your eyes from battery acid, gasoline, dirt and dust.
- Avoid touching hot surfaces such as the engine, radiator, hoses and exhaust pipes.
- Always have a fire extinguisher rated BC handy, for flammable liquids and electrical fires.

FIRE AND EXPLOSION

⚠ WARNING

Gasoline is highly flammable and gasoline vapor is explosive. Never smoke while working on a vehicle. Keep all open flames away from gasoline tanks and lines. Wipe up any spilled gasoline immediately.

Be careful when using gasoline. Do not use gasoline to clean parts. Store only in approved containers away from sources of heat or flame.

VENTILATION

⚠ WARNING

Vehicle exhaust contains lethal fumes. Breathing these fumes, even in low concentrations, can cause death. Never operate a vehicle in an enclosed area without venting exhaust to the outside.

TORQUE CHART

⚠ CAUTION

Read instructions before assembling. Fasteners should be finger tight until instructed to tighten according to the torque chart. Use standard methods and practices when attaching snowplow including proper personal protective safety equipment.

Recommended Fastener Torque Chart (ft-lb)

Size	SAE Grade 2	SAE Grade 5	SAE Grade 8
1/4-20	6	9	13
5/16-18	11	18	28
3/8-16	19	31	46
3/8-24	24	46	68
7/16-14	30	50	75
1/2-13	45	75	115
9/16-12	66	110	165
5/8-11	93	150	225
3/4-10	150	250	370
7/8-9	150	378	591
1-8	220	583	893

Metric Grade 8.8 (ft-lb)

Size	Torque	Size	Torque
M 6	7	M 12	60
M 8	17	M 14	95
M 10	35	M 16	155

These torque values apply to fasteners except those noted in the instruction.

BLADE, HEADGEAR AND A-FRAME ASSEMBLY

NOTE: For easier assembly and installation, vehicle and all snowplow components should be on a smooth, level, hard surface, such as concrete.

1. Place U-bolt on to extension spring. Place 3/8" nut on to each side of U-bolt. Place U-bolt through crossbar on A-frame. Place lock washers and 3/8" nuts on U-bolt and tighten.

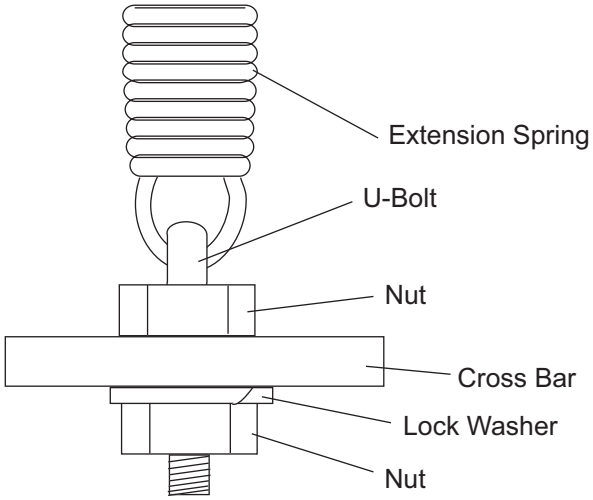

2. Attach the A-frame to the blade. Insert the 1" x 16" pivot pin down through the blade and A-frame and secure with a 1/4" x 2" slotted spring pin.

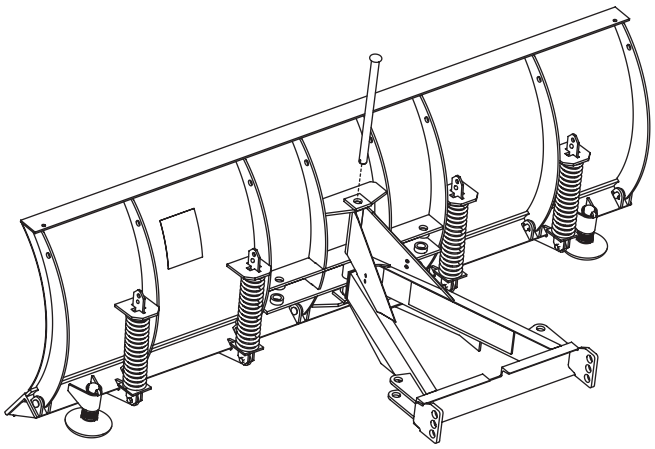

3. Install a blade guide on each end of the top of the blade. For each guide, put one washer and one nut on either side of the blade.

4. Install the jack by pulling the jack lock out and inserting the jack up through the slot in the headgear. Release the jack lock to hold the jack in place. Attach the jack handle to the jack with a 3/8" lock washer and nut.

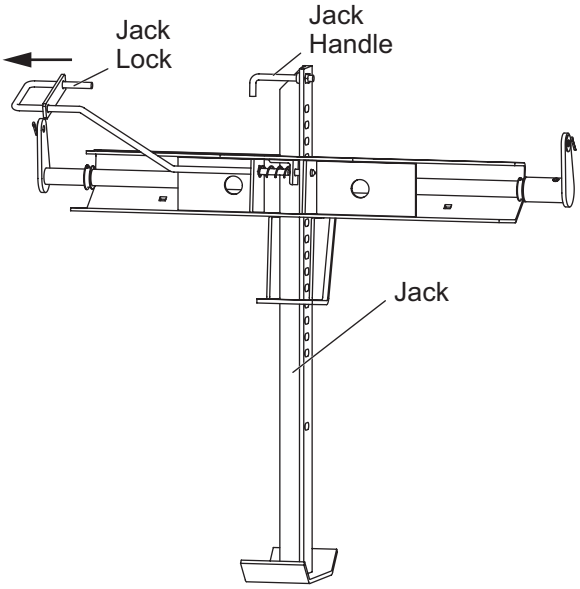

5. Align holes in headgear assembly with the middle hole in the A-frame pushears. Attach the A-frame to the headgear assembly with two steps pins and 1/4" x 1-1/2" cotter pins. Insert the step pins from the outside of the headgear. Verification of proper A-frame position will be made during Final Adjustments at the end of these instructions.

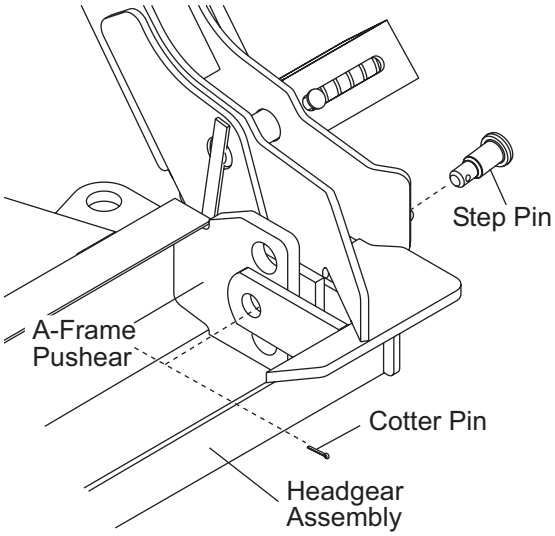

6. Install a 3/8" U-bolt through a link in one end of the lift chain. Attach U-bolt and chain to the holes on the driver's side of the A-frame with two 3/8" lock washers and nuts. Tighten. The other end of the lift chain will pass through the stop link on the lift arm and then be attached to the passenger's side of the A-frame after hydraulic unit is installed.

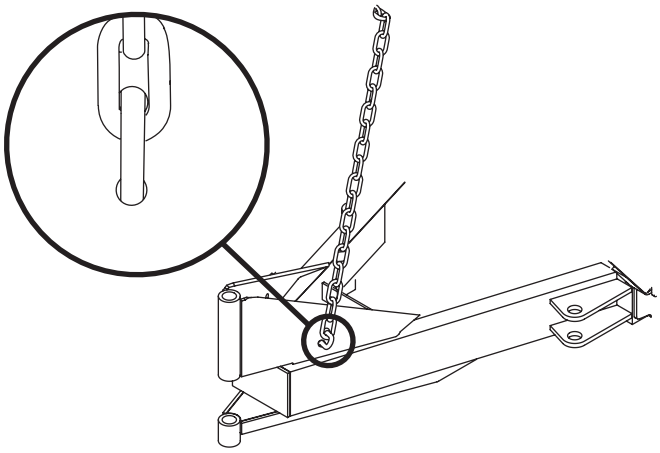

7. Insert the cable down through the hole in the strap fork. Attach the strap fork to the hole in the stop link on the lift arm with a 3/8" x 1" clevis pin and 1/8" x 1" cotter pin. Slip the cable thimble onto the top loop in the spring previously installed in the front of the A-frame.

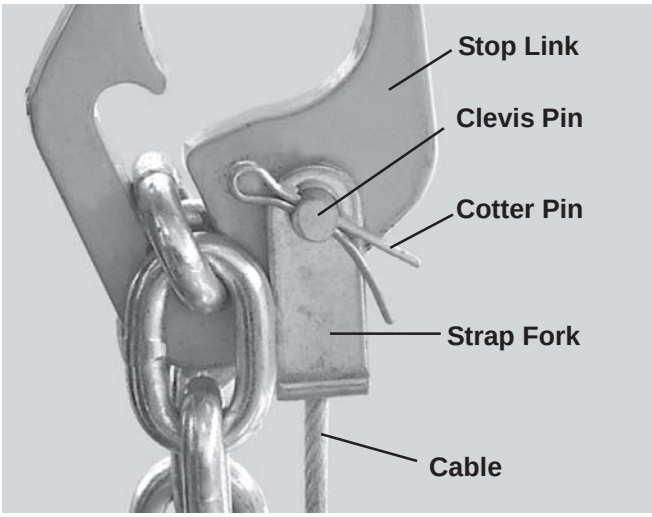

NOTE: The slotted end of the thimble may need to be opened to slip it onto the loop. Fully close the slot after attaching the thimble to the spring.

8. Loop the end of the cable around the thimble. Pull the cable up against the thimble until the slack is removed. Attach the end of the cable back onto itself with two cable clamps loosely installed close to the thimble as shown.

Due to varying vehicle heights, the length of the cable must be adjusted for the vehicle in the Final Adjustments section at the end of these instructions.

NOTE: After five to ten hours of snowplow usage, retorque all pushplate assembly fasteners.

HYDRAULIC UNIT INSTALLATION

Preparing Angle and Lift Rams for Installation

1. Remove the plug from the ram port.

2. Turn the jam nut on the fitting as far back as possible.

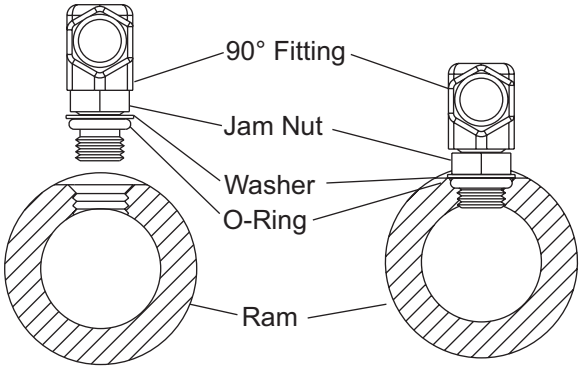

3. Lubricate the O-ring with clean hydraulic fluid.

4. Screw fitting into port by hand as far as it will go. The washer should contact port face and shoulder of the jam nut threads.

5. Unscrew fitting to proper position, no more than one full turn.

6. Use one wrench to hold the fitting body in position and tighten the jam nut with another wrench until the washer again contacts port face. Tighten 1/8 to 1/4 turn to lock fitting in place.

7. Attach 22.0" HP hose to lift ram. Attach a 36.0" HP hose to the passenger-

Attaching Lift and Angle Rams

1. Attach the lift ram to the headgear using one 1" x 3-5/16" clevis pin and 1/4" x 1-1/2" cotter pin. Attach lift ram to the lift arm using one 1" x 3-5/16" heat treated (head marked "HT") clevis pin and 1/4" x 1-1/2" cotter pin.

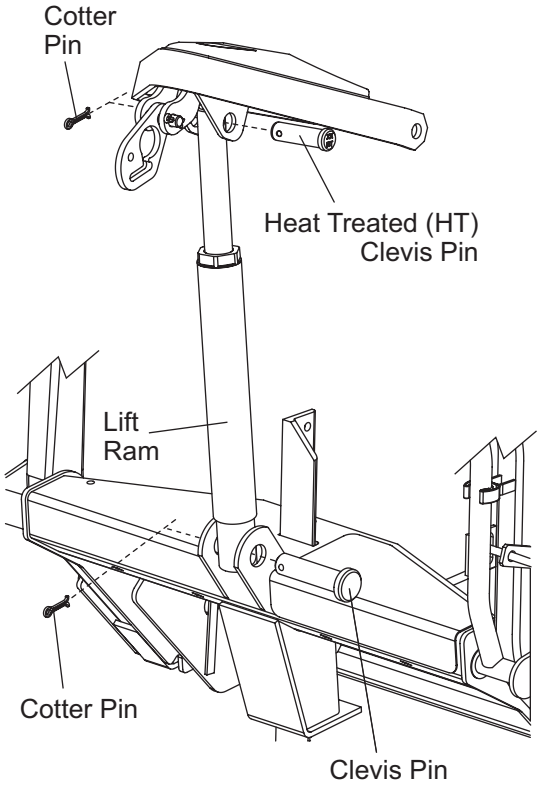

2. Attach the angle rams to the A-frame and blade with the four anchor pins and cotter pins. Note that the ram ports are on the inside, nearest the A-frame.

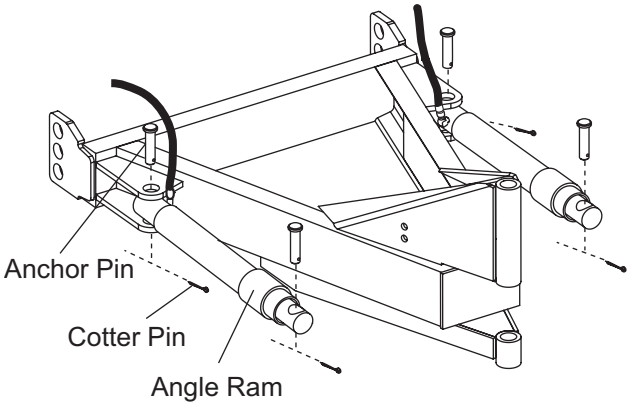

Mounting Hydraulic Unit

1. Bolt the Insta-Act® hydraulic unit to the headgear using two 1/4" x 3" cap screws, flat washers and locknuts.

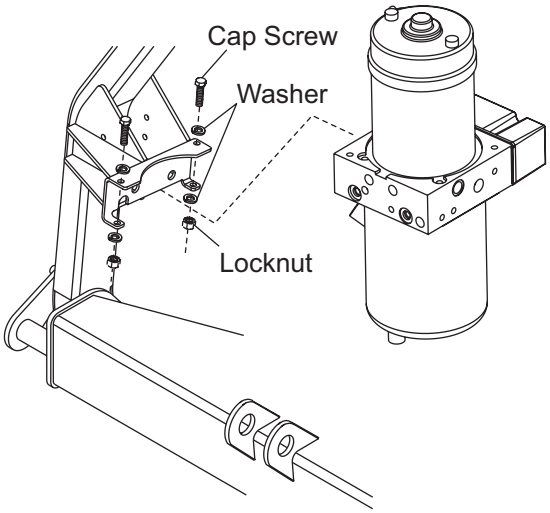

2. Remove the plugs from the angle ports, lift port and the 3/8" NPTF plug from the breather port. Screw the 45° elbows into the angle ports. Screw a 90° swivel elbow into the lift port and a 3/8" NPTF x 90° street elbow into the breather port.

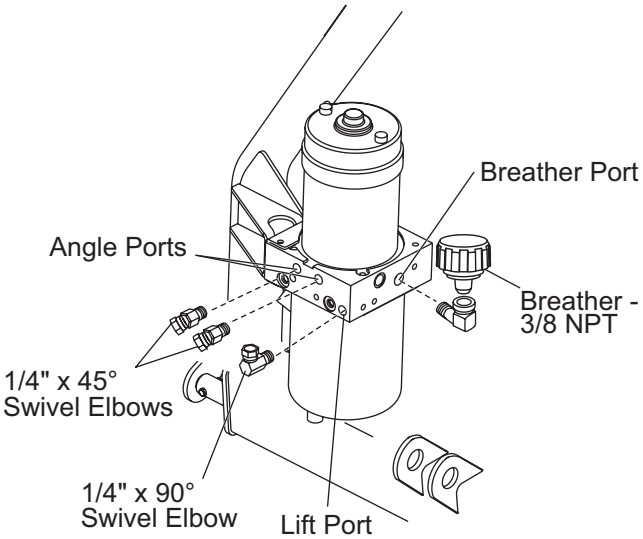

3. Looking at the front of the vehicle, orient the 45° swivel elbows in the angle ports as shown and the 90° swivel lift port should be at 12 o'clock. The 3/8" x 90° street elbow in the breather port should point straight up. Screw the breather into the street elbow.

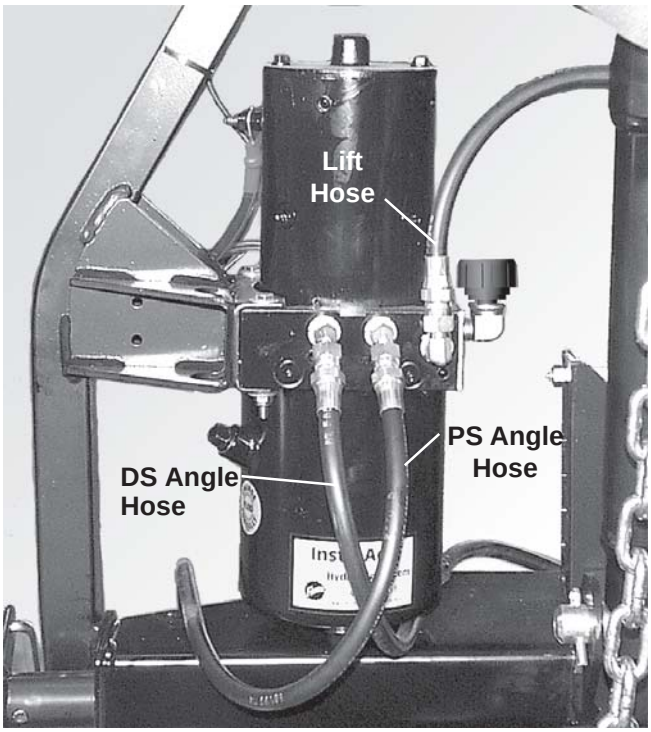

4. Route hydraulic hoses as shown. Attach each angle ram hose to the headgear near the hydraulic unit with a clamp loop. Attach each clamp loop to the headgear with a cap screw and locknut using the holes provided.

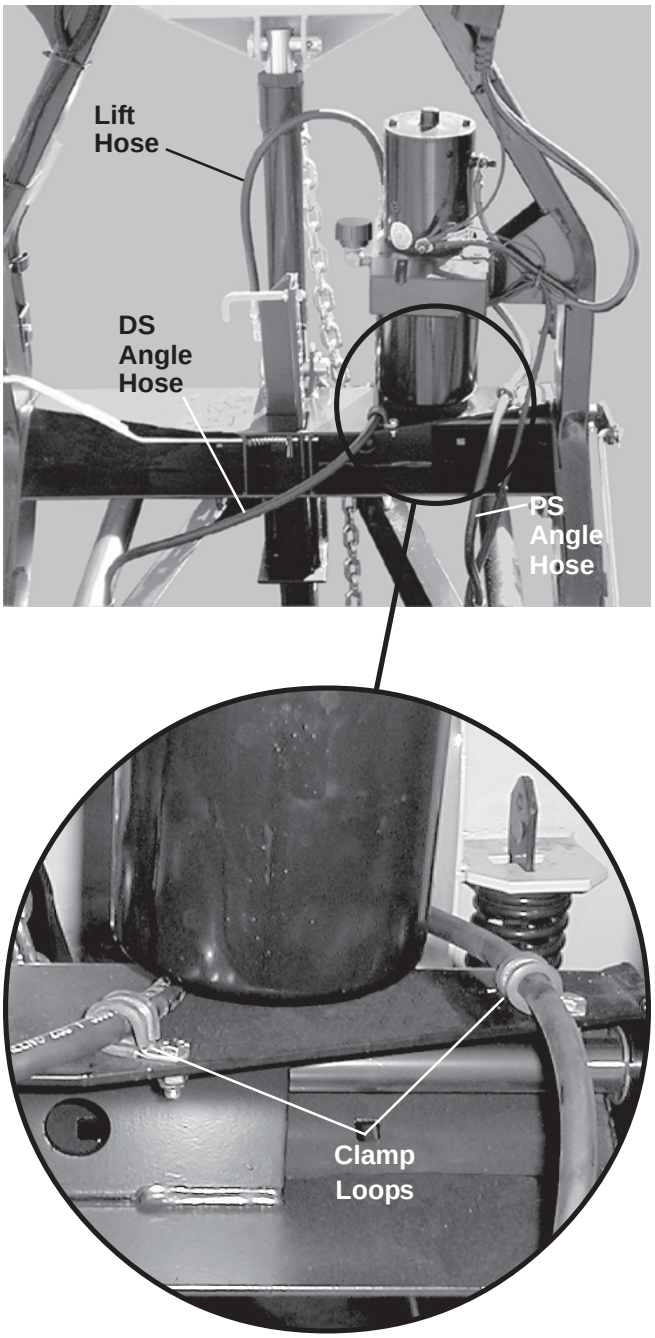

SNOWPLOW CONTROL HARNESS AND CABLE INSTALLATION

NOTE: Use dielectric grease to prevent corrosion on all electrical connections. Fill receptacles and lightly coat ring terminals and blades before assembly.

1. Remove the valve cover, and connect the snowplow control harness to the valve coil terminals according to the instructions inside the valve cover.

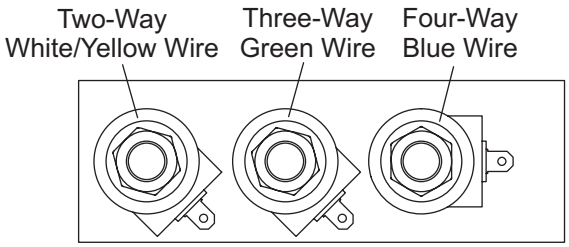

Black/Orange Wire to Each Coil

NOTE: The strain relief must be inside the cover to prevent unnecessary strain on the solenoid connectors.

2. Apply anti-seize lubricant to the fasteners and reinstall the valve cover.

3. Attach the snowplow battery cable to the motor terminals. Connect the black and red striped wire to the POSITIVE (+) terminal. Connect the black wire to the NEGATIVE (–) terminal. Connect the smaller black wire (from control harness) with the orange stripe to the NEGATIVE (–) terminal of the motor.

4. Cable tie harnesses and battery cable to the headgear as shown on the following page.

NOTE: Snowplow lighting and control harnesses plug into one another for storage.

HEADLAMP INSTALLATION

⚠ WARNING

Your vehicle must be equipped with snowplow headlamps and directional lights.

If installation instructions were included with the headlamps, follow them now.

1. Slide a headlamp swivel onto the threaded stem on the underside of the driver-side headlamp assembly. The park/turn lamp should be to the outside of the headlamp.

2. Mount the headlamp to the headgear light bracket as shown. Secure with a lock washer and nut.

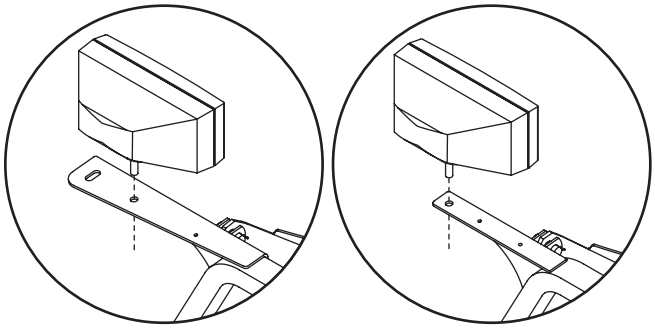

New Style Old Style

3. Repeat steps 1 and 2 on the passenger's side.

4. Route the snowplow lighting harness as shown, connecting the black/orange ground wire to the NEGATIVE (–) motor terminal. Secure the snowplow lighting harness to the headgear using cable ties as needed.

5. Read, follow and remove the headlamp label if one is present.

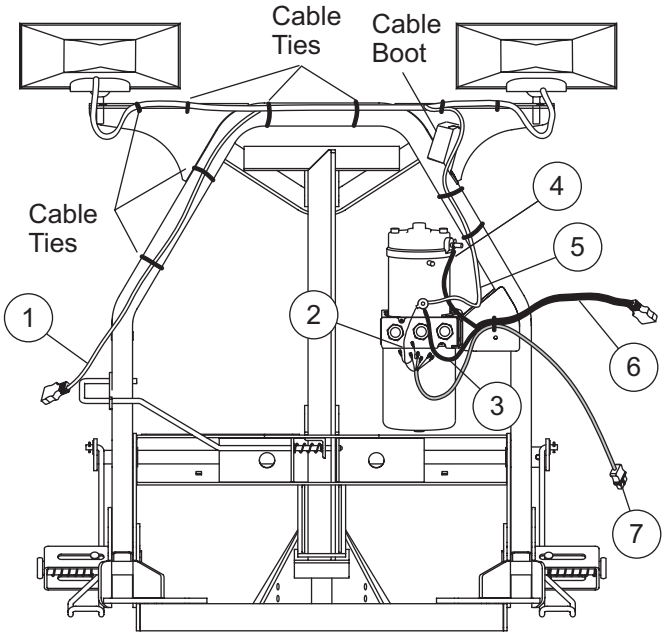

Cable Routing	
1	Snowplow Lighting Harness
2	Black/Orange Wire
3	Black Wire
4	Black/Red Wire (connected to POSITIVE [+] motor terminal)
5	Black/Orange Ground Wire (connected to NEGATIVE [–] motor terminal)
6	Snowplow Battery Cable, shrouded plug (plug into cable boot for storage)
7	Snowplow Control Harness (plug into snowplow lighting harness for storage)

FINAL ADJUSTMENTS

1. Complete installation of lift chain by inserting the loose end of lift chain through stop link on the lift arm. Fasten to other holes in the A-frame using a 3/8" U-bolt, lock washer and nut. Hand tighten.

2. Complete electrical installation in vehicle and install control. Attach snowplow to vehicle.

⚠ CAUTION

Do not mix different types of hydraulic fluid. Some fluids are not compatible and may cause performance problems and product damage.

3. Fill the hydraulic unit to top of fill hole with hydraulic fluid.

   System Capacity:
   Reservoir – 1-3/4 quart
   Complete System – 2-3/8 to 2-3/4 quarts

⚠ WARNING

Keep 8' clear of the blade when it is being raised, lowered or angled. Do not stand between the vehicle and blade or directly in front of the blade. If the blade hits or drops on you, you could be seriously injured.

4. Raise and lower the snowplow several times. Be sure to completely retract the lift ram each time. Return to the lower position, retracting the lift ram completely.

5. With the blade lowered, add more hydraulic fluid to the reservoir. Keeping the blade to the ground, angle the blade several times in each direction.

6. With the lift ram fully retracted, add enough additional hydraulic fluid to bring fluid level to top of fill hole.

7. With snowplow attached to properly ballasted vehicle and blade lowered to ground, the A-frame should be parallel with the ground. If not, reposition A-frame using upper or lower pushear holes.

8. Adjust the length of the lift chain so the A-frame hits the lower portion of the headgear when the lift ram is fully raised (10"). Tighten U-bolts. For XBLADE™ lift chain adjustment, skip to page 12.

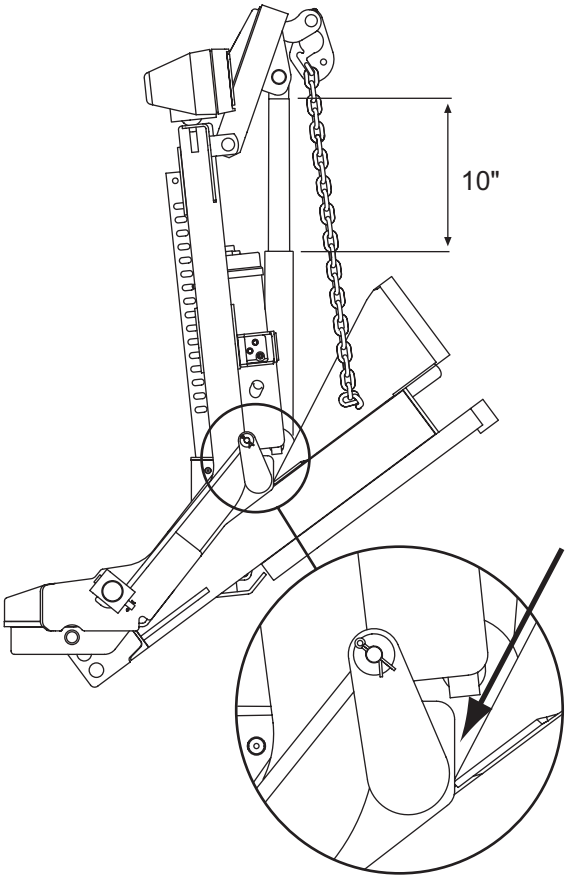

9. For reliable operation and to prevent damage to the 6-1/2" lift arm retraction spring, the length of the cable must be adjusted when attached to the vehicle it will be used on. With the lift ram fully collapsed, wrap the cable tightly around the thimble, shorten/lengthen the cable to remove all slack from the cable, then tighten the cable clamps.

10. After adjustment, excess cable should be trimmed off close to the second cable clamp. Cover cut end of cable with electrical tape. Excessive spring tension will make attaching/detaching difficult and overextend the spring.

XBLADE™ LIFT CHAIN ADJUSTMENT

To prevent the snowplow from blocking the snowplow headlamps during travel, adjust lift chain using the following steps:

1. With A-frame level and lift ram collapsed, remove the passenger-side lift chain U-bolt.

2. Adjust the chain to the minimum length indicated by the chart below. (Chain will be slack.)

3. Reattach the loose end of the lift chain to the other side of the A-frame using a 3/8" U-bolt, lock washer and nut. Chain must be same length used in step 2.

4. Fully tighten U-bolts before lifting blade.

5. For reliable operation and to prevent damage to the 6-1/2" lift arm retraction spring, the length of the cable must be adjusted when attached to the vehicle it will be used on. With the lift ram fully collapsed, wrap the cable tightly around the thimble, shorten/lengthen the cable to remove all slack from the cable, then tighten the cable clamps.

6. After adjustment, excess cable should be trimmed off close to the second cable clamp. Cover cut end of cable with electrical tape. Excessive spring tension will make attaching/detaching difficult and overextend the spring.

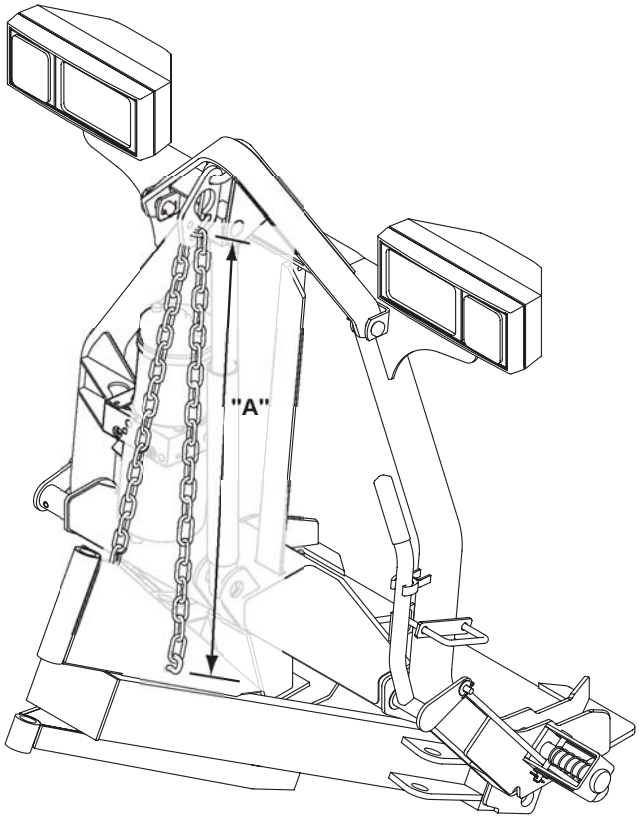

A-Frame Adjustment Holes	Minimum Dimension "A"
Top	29.0"
Middle	28.5"
Bottom	28.0"

VEHICLE LIGHTING CHECK

1. Check the operation of vehicle and snowplow headlamps with snowplow mounted to vehicle and all harnesses connected.

   Turn signals and parking lamps

   Parking lamps ON:
   - Both vehicle and snowplow parking lamps should be ON at the same time.

   Driver-side turn signal ON:
   - Both vehicle and snowplow driver-side turn signal lamps should flash at the same time.

   Passenger-side turn signal ON:
   - Both vehicle and snowplow passenger-side turn signal lamps should flash at the same time.

   Headlamps

   Move vehicle headlamp switch to the "ON" position. Connecting and disconnecting the headlamp harness plug from the vehicle harness connector should switch between vehicle and snowplow headlamps as follows:

   Headlamp harness plug DISCONNECTED:
   - Vehicle headlamps should be ON.
   - Snowplow headlamps should be OFF.

   Headlamp harness plug CONNECTED*:*
   - Snowplow headlamps should be ON.
   - Vehicle headlamps should be OFF.

   Dimmer switch should dim whichever headlamps are operating. The high beam indicator on the dash should light when either set of headlamps is on high beam.

   Daytime Running Lamps (DRLs)

   With headlamp switch OFF, activate the DRLs.

   Headlamp harness plug DISCONNECTED:
   - Vehicle DRLs should be ON.
   - Snowplow headlamps should be OFF.

   Headlamp harness plug CONNECTED AND vehicle uses the headlamp bulbs for DRLs:
   - Snowplow headlamps should be ON in DRL mode (with reduced intensity compared to high or low beam).
   - Vehicle DRLs should be OFF.

   Headlamp harness plug CONNECTED AND vehicle uses lamps **other than** the headlamp bulbs for DRLs:
   - Snowplow headlamps should be ON in DRL mode (with reduced intensity compared to high or low beam).
   - Vehicle DRLs should be ON.
   - Vehicle headlamps should be OFF.

   Joystick Control or Hand-Held Control

   The control indicator light should light whenever the control ON/OFF switch and the ignition (key) switches are both in the "ON" position. The snowplow plugs do not need to be connected to the vehicle harness connectors.

2. Connect all snowplow and vehicle harnesses. Raise the snowplow and aim snowplow headlamps according to the Snowplow Headlamp Beam Aiming instructions included with the headlamps and any state or local regulations.

3. Check aim of vehicle headlamps with snowplow removed.

4. When the snowplow is removed from the vehicle, install the plug cover on the vehicle battery cable connector and insert the snowplow battery cable connector into the cable boot on the snowplow. On both the vehicle and snowplow, the lighting harness and control harness connectors plug into one another for storage.

OWNER'S MANUAL PACKET

If the completed snowplow will be delivered immediately, the Owner's Manual should be reviewed with and given to the purchaser.

If the snowplow is completed prior to delivery to the purchaser, attach the Owner's Manual Packet to the electrical cable of the cab control for safekeeping.

Fisher Engineering reserves the right under its product improvement policy to change construction or design details and furnish equipment when so altered without reference to illustrations or specifications used. Fisher Engineering or the vehicle manufacturer may require or recommend optional equipment for snow removal. Do not exceed vehicle ratings with a snowplow. Fisher Engineering offers a limited warranty for all snowplows and accessories. See separately printed page for this important information. The following are registered (®) trademarks of Douglas Dynamics, L.L.C.: FISHER®, Insta-Act®, Minute Mount® 2, XBLADE™.

Printed in U.S.A.