Fisher Engineering
50 Gordon Drive, Rockland, Maine 04841-2139 • www.fisherplows.com

69400
69450-2, 69450-3, 69450-4
December 15, 2021
Lit. No. 85307, Rev. 07

Blade and Off-Truck Kit

HT Series™ Snowplow

Parts List

HT Series™ BLADE COMPONENTS 4
HT Series OFF-TRUCK KITS 6
Headgear and A-Frame Components 6
Hydraulic Unit Components 8
Lift and Angle Ram Components 10
Hoses and Fittings 11
Electrical Components 12
Vehicle-Side Harness Diagram – 3-Port, 2-Plug Systems 13
Headlamp Kits 14–15

Blade Components

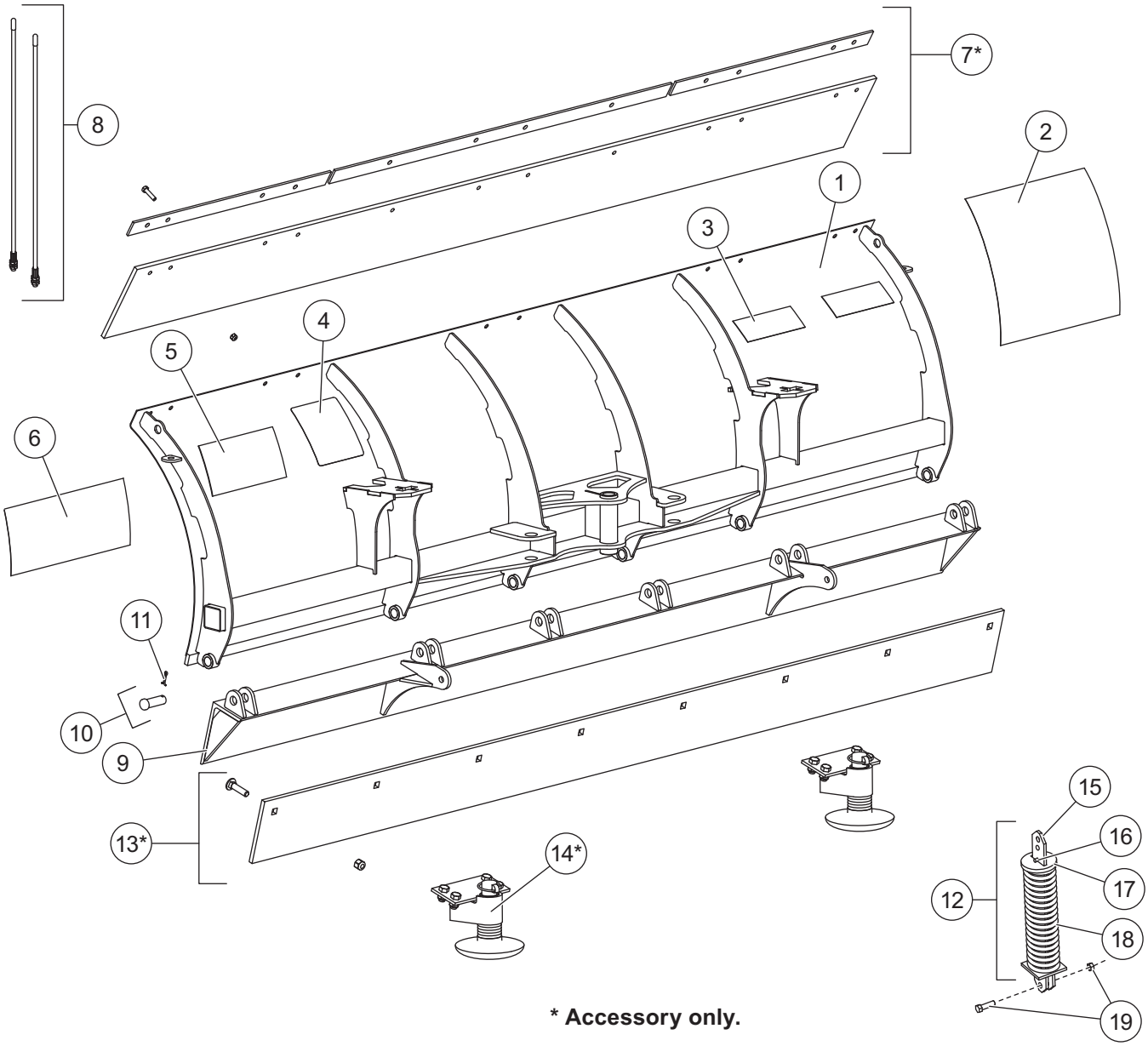

*** Accessory only.**

69400 Blade Components							
Item	**Part**	**Qty**	**Description**	**Item**	**Part**	**Qty**	**Description**
1	69700	1	Blade	10	84844	6	3/4 x 2-3/16 Machine Pin w/Cotter
2	20238	1	Label – Logo, Splatter, 13-1/4 x 14-1/2	11	90658	6	5/32 x 1-1/4 Cotter Pin
3	26211	1	Label – Logo, STORM GUARD™	12	21452	2	Removable Spring Assembly
4	59900	1	Label – Warning/Caution, Snowplows	13*	5532	1	3/8 Steel Cutting Edge Kit, 7'6"
5	85416	1	Label – Warning, Attach/Detach	ns	50678*	1	1/2 Steel Cutting Edge Kit, 7'6"
6	96361	1	Label – Logo, HT Series™	14*	27880	1	Shoe Kit (pair)
7*	69605	1	Rubber Deflector Kit	ns	69660*	1	SnoFoil® Assembly Kit
8	7906K	1	Blade Guides (set of 2)	ns	44405*	1	Curb Guard Kit (pair)
9	69622	1	Base Angle Kit				
Item 10			**84844 3/4 x 2-3/16 Machine Pin w/Cotter**				
		1	3/4 x 2-3/16 Machine Pin	11	90658	1	5/32 x 1-1/4 Cotter Pin
Item 12			**21452 Removable Spring Assembly**				
15	21450	1	Removable Spring Bar	18	5323	1	Trip Spring
16	20181	1	1/4 x 1-1/4 Pin	19	40905	1	Shoulder Bolt & Locknut Packet
17	20191	1	Removable Spring Disc				
ns = not shown							

* Accessory only.

Headgear and A-Frame Components

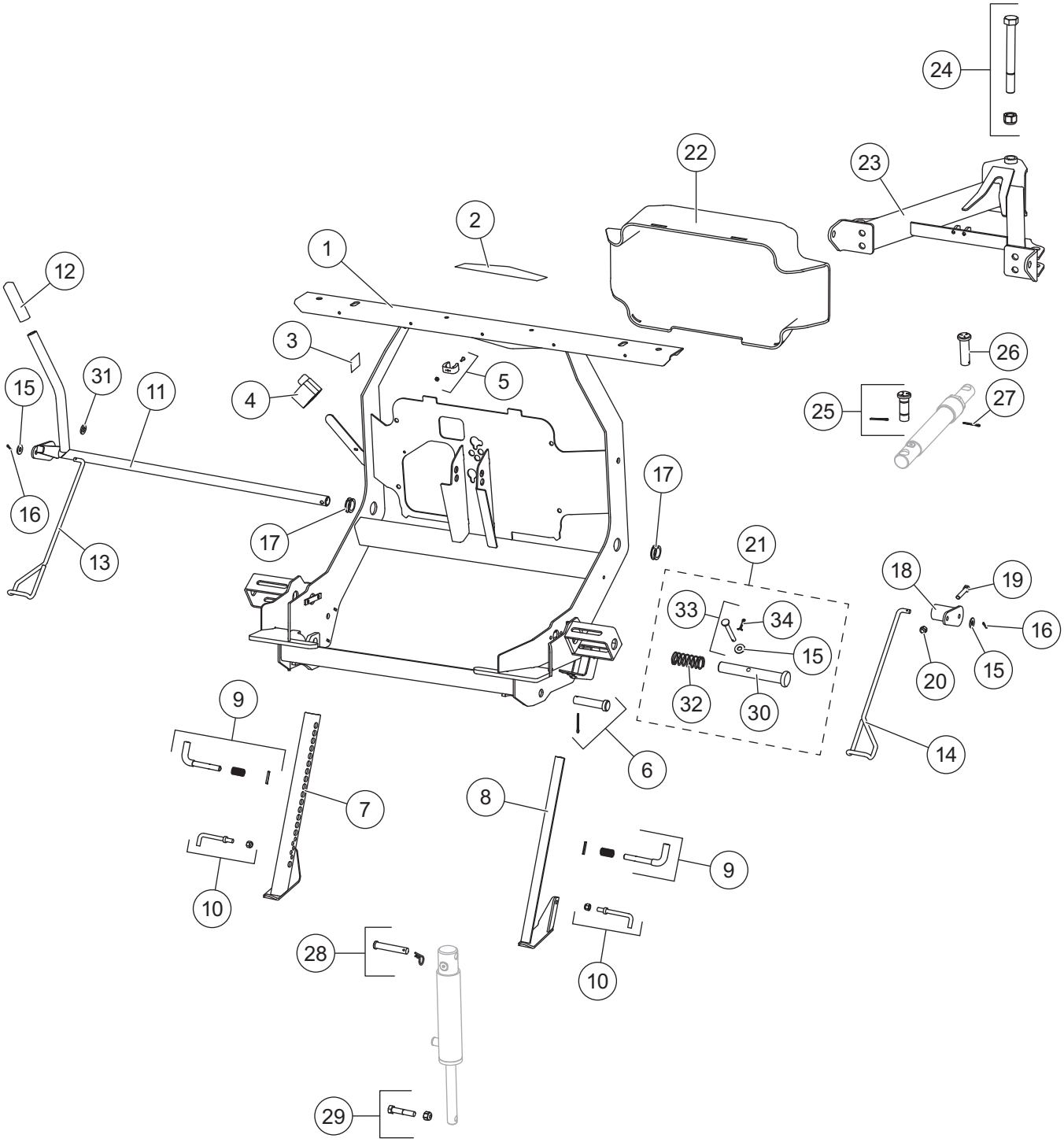

HT Series™ Headgear and A-Frame Components							
Item	**Part**	**Qty**	**Description**	**Item**	**Part**	**Qty**	**Description**
1	77358	1	Headgear	17	27163K	1	Bushing Kit (pkg of 2)
2	69371	1	Headgear Label	18	69683	1	Link Arm
3	69689	1	Label – Logo, SECURITY GUARD™	19	90043	1	3/8-16 x 2 Hex Cap Screw G5
4	8284K	1	Cable Boot	20	91333	1	3/8-16 Hex Locknut GB
5	27162K-1	1	Stop Clip Kit	21	27168K	2	Connecting Pin Kit
6	69607	2	Clevis Pin Kit	22	69650	1	Hydraulic Cover
7	69842	1	HT Jack Leg – DS	23	69523	1	A-Frame
8	69843	1	HT Jack Leg – PS	24	69667	1	1 x 9 Bolt Kit
9	69618	2	Stand Pin Release Kit	25	69666	2	1 x 3-1/4 Pin Kit
10	27164K	2	Handle Kit	26	93074	2	1 x 3-1/4 Clevis Pin
11	69838	1	Handle, Link Arm Assembly	27	91911	2	5/32 x 1-1/2 Cotter Pin
12	27535	1	Handle Cover Kit	28	50653	1	5/8 x 3-1/2 Pin Kit
13	27166K	1	Wire Cam Kit – DS	29	69669	1	Lift Ram Pin Kit (rod)
14	27167K	1	Wire Cam Kit – PS	30	26833	2	1 x 6-15/16 Pin
15	90315	4	3/8 Flat Washer	31	86833	1	Wear Ring Doubler
16	91902	1	1/8 x 1 Cotter Pin				
Item 21			**27168K Connecting Pin Kit**				
30	26833	1	1 x 6-15/16 Pin	33	26219	1	Clevis Pin Kit
32	821	1	3/4 x 3-1/2 Compression Spring				
Item 33			**26219 Clevis Pin Kit**				
		1	3/8 x 3-1/4 Clevis Pin	34	90658	1	5/32 x 1-1/4 Cotter Pin
15	90315	1	3/8 Flat Washer				
G = Grade							

Hydraulic Unit Components

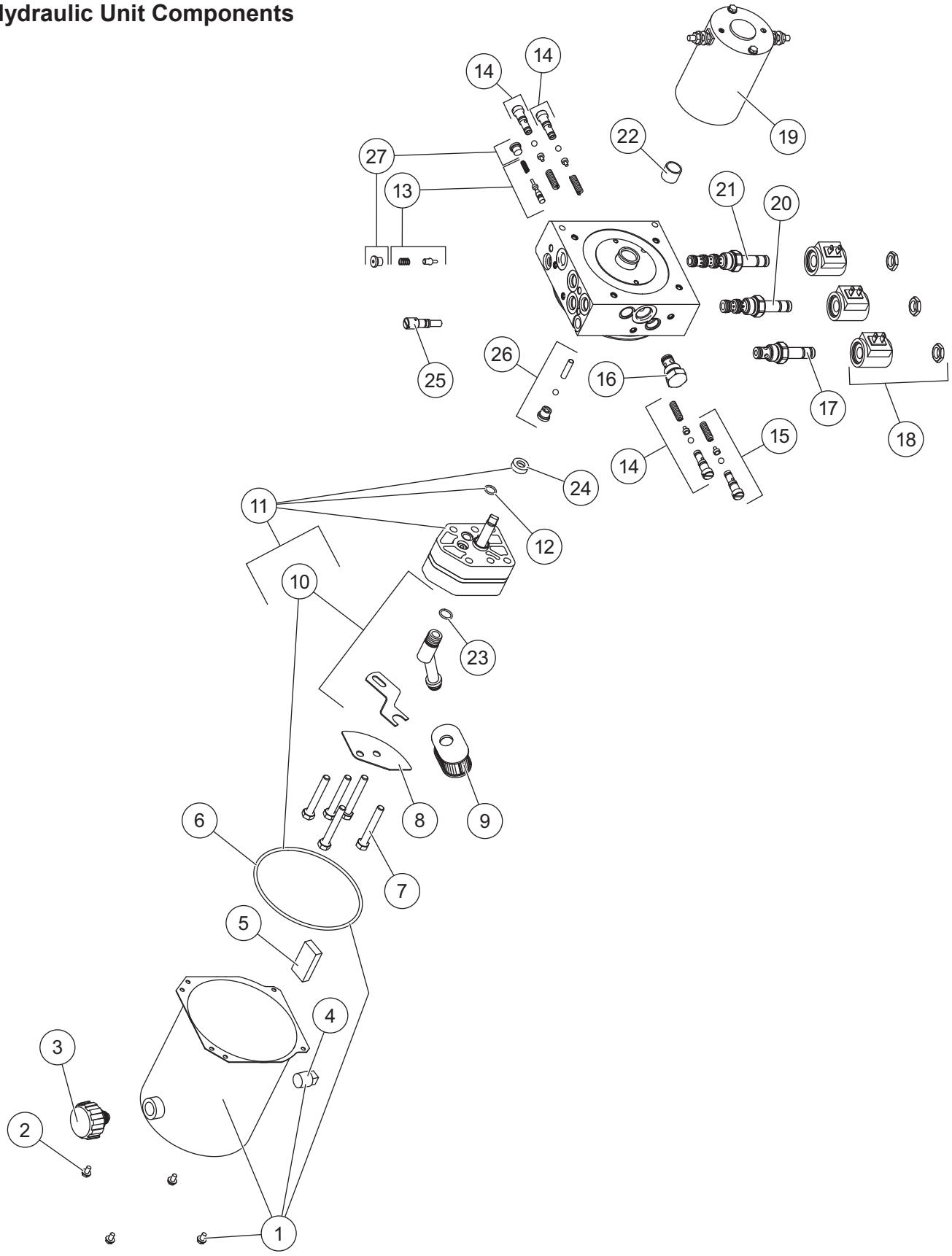

48552 HT Series™ Hydraulic Unit 48553‡ HT Series Hydraulic Unit Service Kit							
Item	**Part**	**Qty**	**Description**	**Item**	**Part**	**Qty**	**Description**
1	48538	1	Reservoir Kit	14	7629K-4	2	Relief Valve Kit (2 sets)
2	66607	4	#10-24 x 5/16 Hex Slotted Washer-Head Machine Screw	15	27792-1	1	Relief Valve Repair Kit
				16	44333-1	1	Check Valve CV08-20
3	21727-2	1	Breather 3/8 NPT Kit	17	7634K-2	1	Valve, 2-Way w/Nut
4	92079	1	Plug, Square 3/8 NPTF	18	7639K-2	3	Coil w/Spade Terminals
5	73897	1	Magnet	19	48543-1	1	Motor Assembly 3"
6	66519	1	O-Ring 2-250	20	66608K-1	1	Cartridge Valve, 3-Way w/Nut
7	90073	5	5/16-18 x 2-1/4 Hex Cap Screw G5	21	7637K-1	1	Cartridge Valve, 4-Way w/Nut
8	48464	1	Plate Baffle	22	64596-1	1	Bearing, Sleeve
9	26781-4	1	Suction Filter	23	56416	1	O-Ring -014
10	66763-1	1	Inlet Fitting/Filter Kit	24	66515	1	Pump Shaft Seal
11	21501-1	1	Hydraulic Pump Kit – IA	25	48517	1	Quill
12	56274	1	O-Ring -013	26	48518	1	Check Valve Assembly
13	7630K	1	Poppet Check Valve Kit	27	92960	2	Plug, Hex Socket –3 M ORB
O-Ring Service Kits							
ns	7632K-5	–	O-Ring & Back-Up Ring Kit	ns	49259-2	–	Seal Kit Cartridge, 3-Way and 4-Way Valve
ns	49258-2	–	Seal Kit, 2-Way Valve				
ns = not shown			M = Male				G = Grade

‡ Includes 48552 hydraulic unit and plow-side electrical components (p. 12).

Lift and Angle Ram Components

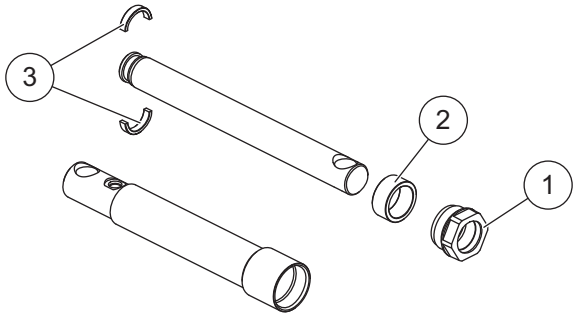

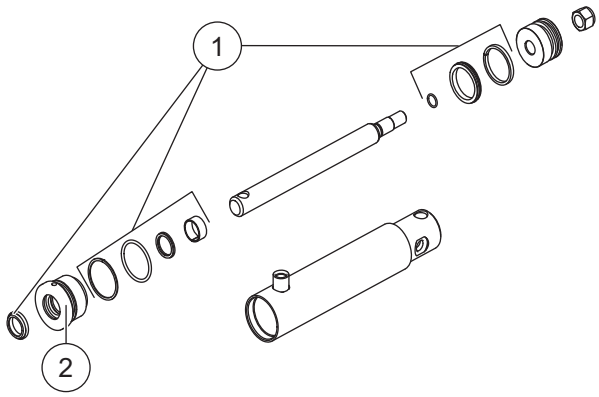

69670 Angle Ram Assembly 1-1/2 x 8			
Item	**Part**	**Qty**	**Description**
1	48985	1	Gland Nut Assembly 1-1/2
2	56537	1	Spacer
3	20118K	1	Split Bearing Kit

69668 Lift Ram Assembly 2 x 6-3/4 DA			
Item	**Part**	**Qty**	**Description**
1	48520	1	Seal Kit 2 x 6-3/4 DA
2	48451	1	Gland Nut Assembly 1"

Hoses and Fittings

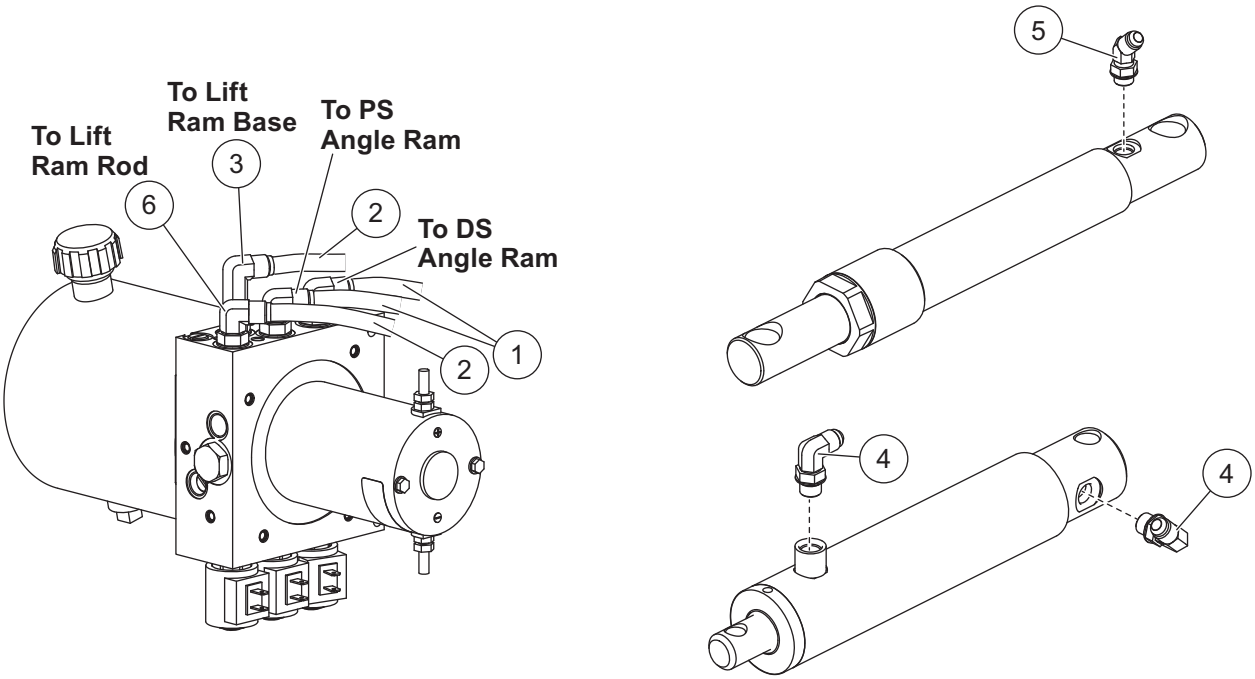

Hoses and Fittings							
Item	**Part**	**Qty**	**Description**	**Item**	**Part**	**Qty**	**Description**
1	56710	2	Hose, 1/4 x 32 w/F JIC Ends	5	56726	2	Elbow, 45° –6 M JIC/–6 M ORB
2	56830	2	Hose, 1/4 x 22 w/F JIC Ends	6	77929	3	Elbow, 90° –6 M JIC/–6 M ORB w/Screen
3	44361	1	Elbow, Extra Long 90° –6 M JIC/ –6 M ORB	ns	56823	1	Hose Wrap
4	56725	2	Elbow, 90° –6 M JIC/–6 M ORB				
F = Female				M = Male			ns = not shown

Electrical Components

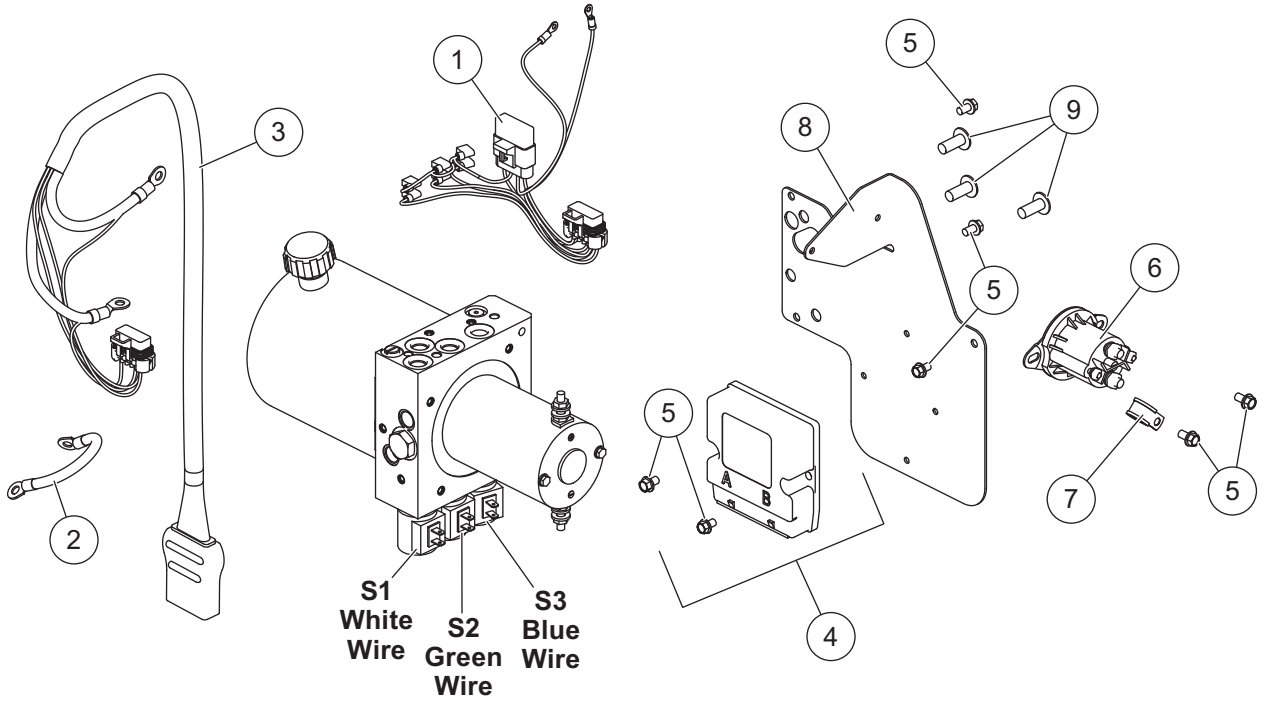

Plow-Side Electrical Components							
Item	**Part**	**Qty**	**Description**	**Item**	**Part**	**Qty**	**Description**
1	28581-1	1	Plow Control Harness, 3-Solenoid	6	42901	1	Motor Relay Kit FLEET FLEX System
2	29071	1	Cable Assembly 8"	7	65340	1	Clamp Loop #10
3	42015	1	Snowplow Battery Cable	8	48522	1	Hydraulic Plate
4	49567	1	Plow Module, 2-Port	9	72384-1	1	3/8-16 x 1 Serrated Flange Hex Cap Screw (pkg of 3)
5	43988	7	1/4-20 x 3/8 Hex Washer-Head Thread-Rolling Screw				
Vehicle-Side Electrical Components							
*	42014	1	Vehicle Battery Cable	*	90730	1	200A Fuse Kit
*	28587	1	Vehicle Control Harness	ns	61548K	1	Plug Cover Kit
ns = not shown							

* For diagram see Vehicle-Side Harness Diagram – 3-Port, 2-Plug System.

Vehicle-Side Harness Diagram
3-Port, 2-Plug System

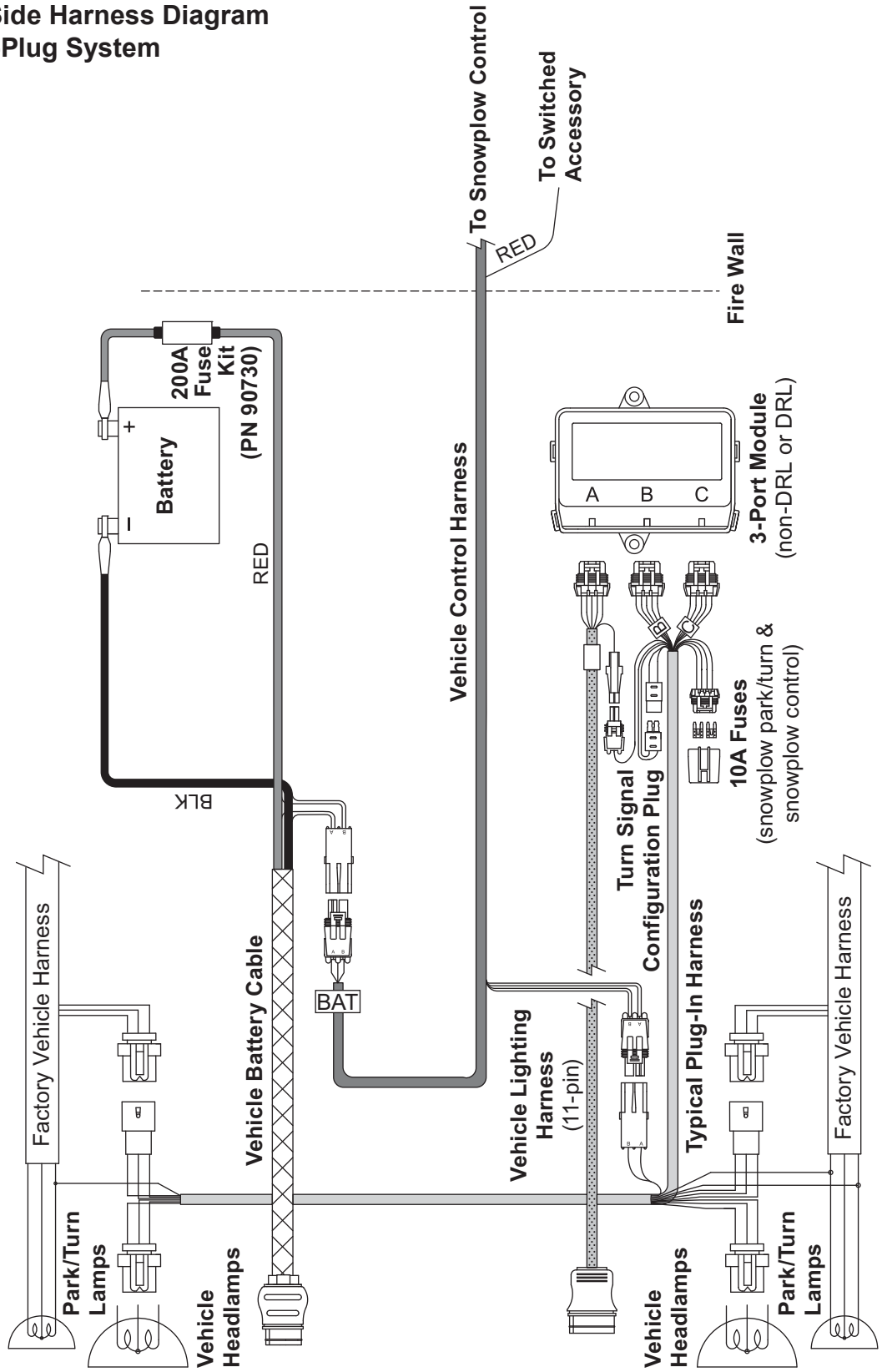

Headlamp Kit – Halogen

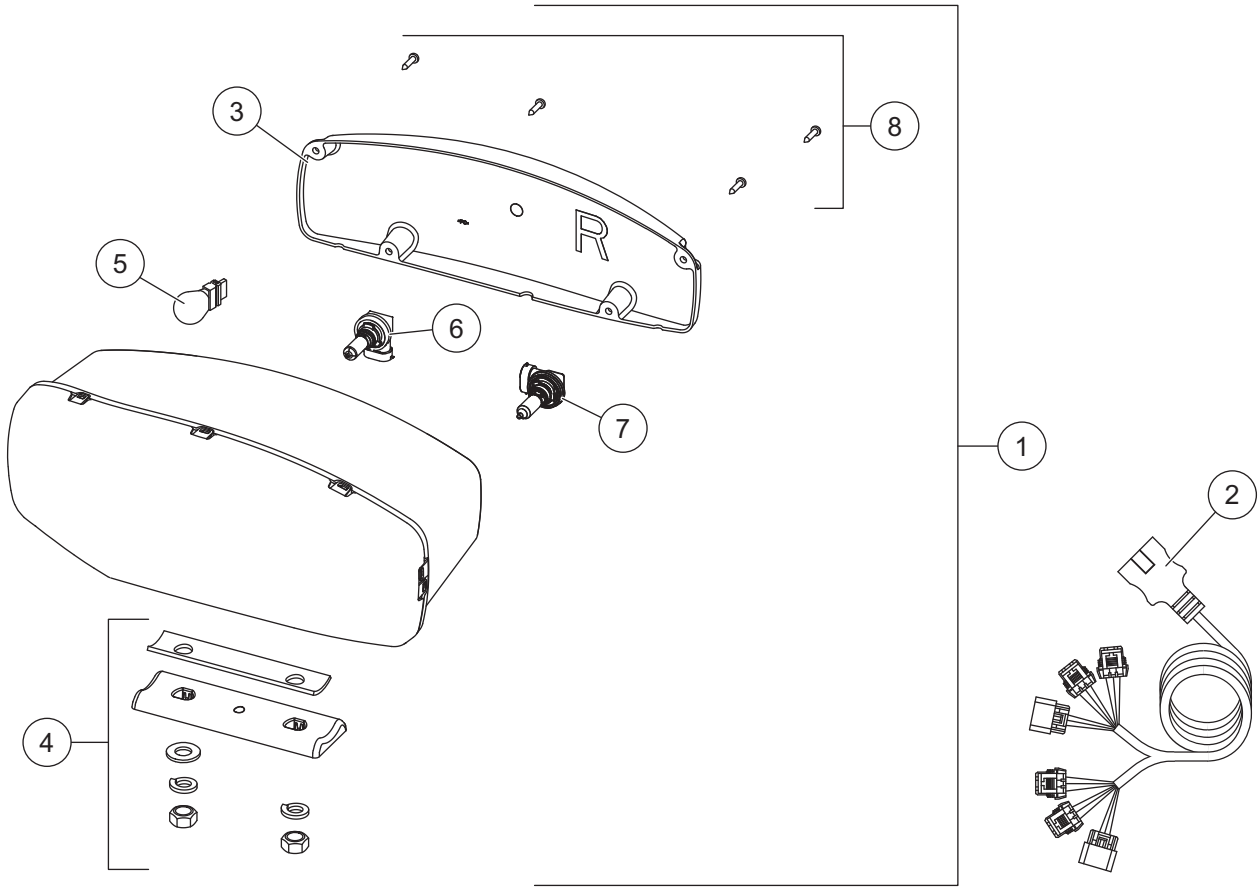

38800 Headlamp Kit H9/H11 (pair)							
Item	**Part**	**Qty**	**Description**	**Item**	**Part**	**Qty**	**Description**
1	38802	1	Headlamp Service Kit H9/H11 − PS	2	38807	1	Harness Service Kit H9/H11
ns	38801	1	Headlamp Service Kit H9/H11 − DS				
Item 1			**38801/38802 Headlamp Service Kit H9/H11 − PS/DS**				
3	38803	1	Rear Cover Kit H9/H11 − PS	6	38811	1	Headlamp Bulb Service Kit H11
ns	38812	1	Rear Cover Kit H9/H11 − DS	7	38809	1	Headlamp Bulb Service Kit H9
4	38804	1	Mounting Hardware Kit H9/H11	8	38808	1	Cover Screws Service Kit H9/H11 (pkg of 4)
5		1	Park/Turn Bulb (trade no. 4157NAK)				
ns = not shown							

Headlamp Kit – LED

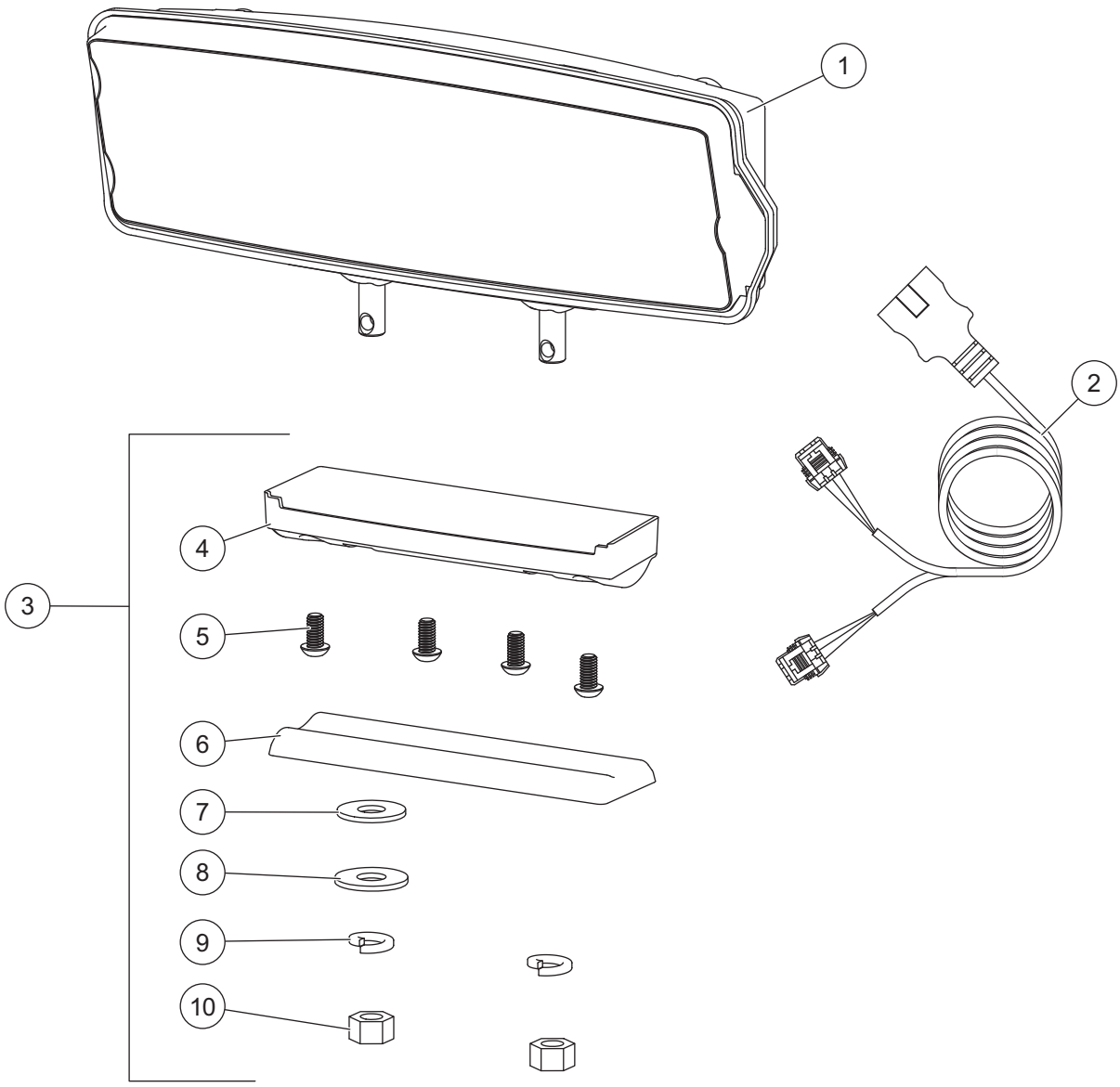

Headlamp Kit LED							
Item	**Part**	**Qty**	**Description**	**Item**	**Part**	**Qty**	**Description**
1	39901	1	Headlamp Service Kit LED – DS	3	39903	1	Mounting Hardware Kit LED
ns	39902	1	Headlamp Service Kit LED – PS	ns	72512	1	LED Harness Connector Cover (pkg of 2)
2	72548	1	Harness Service Kit LED				
Item 3			**39903 Mounting Hardware Kit LED**				
4		1	Plastic Casing	8		1	1/2 Flat Washer
5		4	1/4 Button Cap Screw	9		2	1/2 Lock Washer
6		1	Headlamp Swivel	10		2	1/2 Hex Nut
7		1	1/2 Rubber Washer	ns		1	Metal Insert
ns = not shown							

Fisher Engineering
50 Gordon Drive
Rockland, ME 04841-2139
www.fisherplows.com

A DIVISION OF FISHER, LLC

Copyright © 2021 Douglas Dynamics, LLC. All rights reserved. This material may not be reproduced or copied, in whole or in part, in any printed, mechanical, electronic, film, or other distribution and storage media, without the written consent of Fisher Engineering. Authorization to photocopy items for internal or personal use by Fisher Engineering outlets or snowplow owner is granted.

Fisher Engineering reserves the right under its product improvement policy to change construction or design details and furnish equipment when so altered without reference to illustrations or specifications used. Fisher Engineering or the vehicle manufacturer may require or recommend optional equipment for snow removal. Do not exceed vehicle ratings with a snowplow. Fisher Engineering offers a limited warranty for all snowplows and accessories. See separately printed page for this important information. The following are registered (®) or unregistered (™) trademarks of Douglas Dynamics, LLC: FISHER®, HT Series™, Minute Mount® 2, SECURITY GUARD™, SnoFoil®, STORM GUARD™.

Printed in U.S.A.